gil@magmamagnets.com trade@magmamagnets.com +972-72-2150592

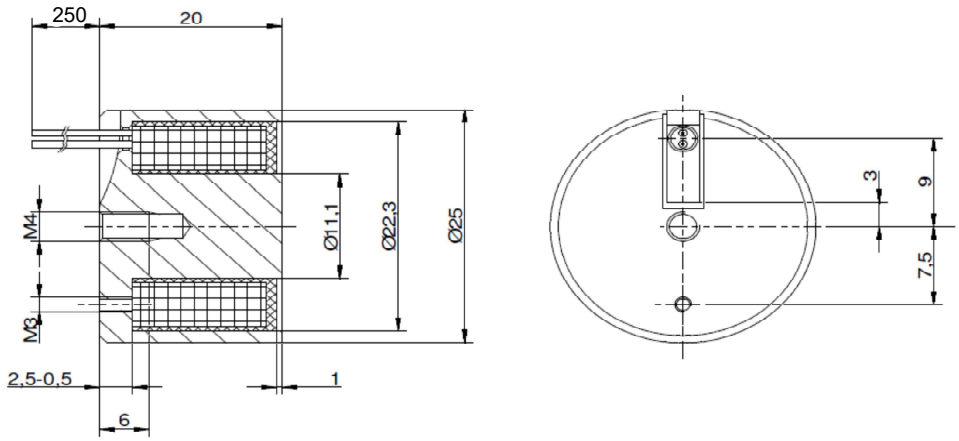

Round electromagnet Ø25

Weight	55g	
Power	3.2W	
Holding force	150N	
Duty cycles	100%	
Voltage	Item 4130015	12VDC
	Item 4140015	24VDC

Options to customized design

- Different voltages / duty cycles
- Magnetic stainless steel housing
- Stainless steel protection plate
- Tailor made cable and connectors
- Special desin

Product data sheet	
Approved	January 2022

Magma Magnetic Technologies
Kibbutz Gesher, Jordan Valley 1515700 Fax:972-4-6753626
www.magmamagnets.com